BORDOLESE 0.187



KMC
GLASS

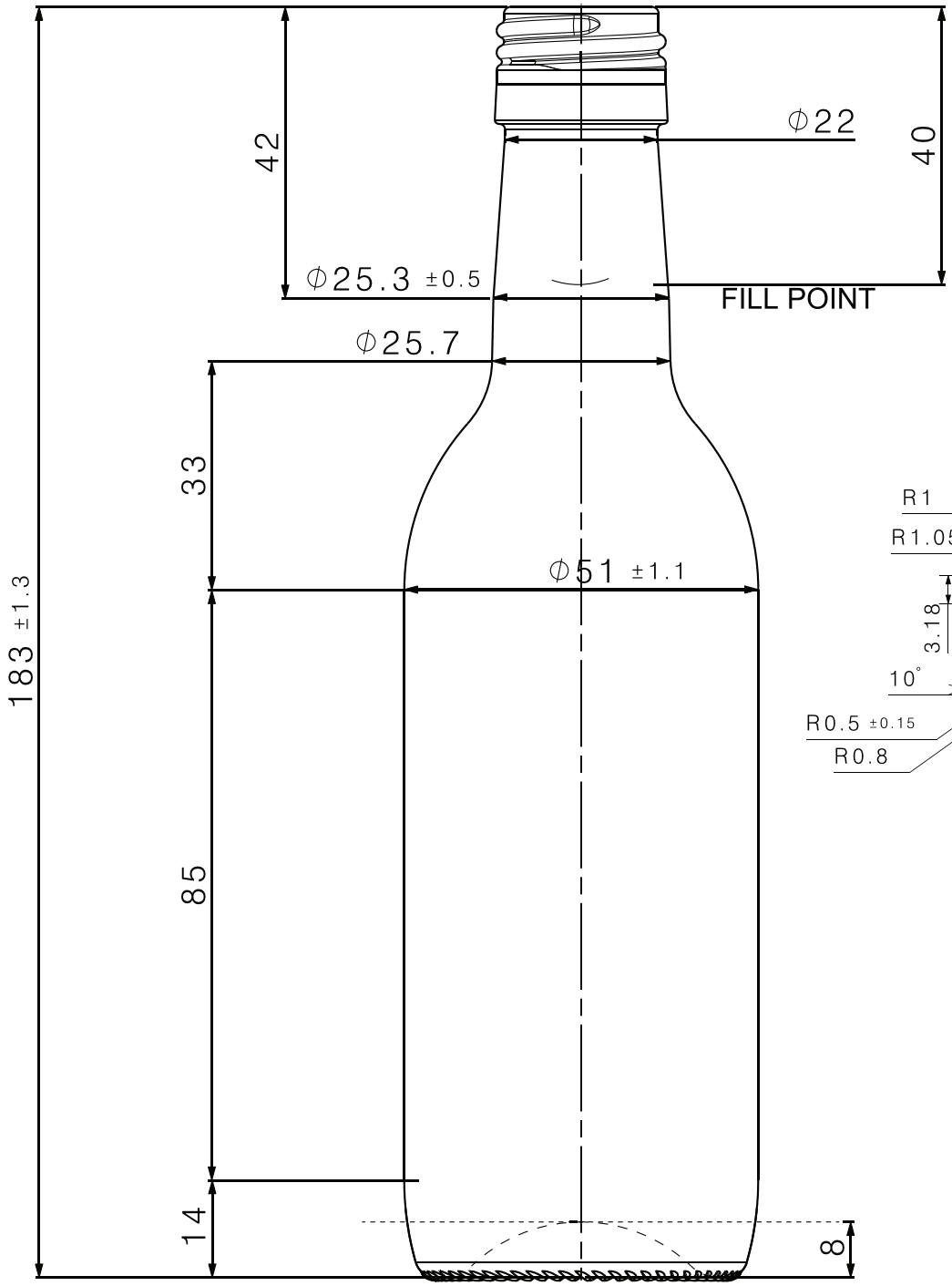

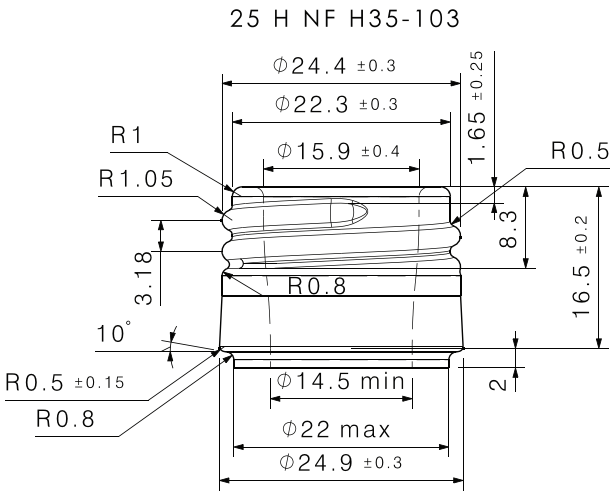

- Bordolese
- Filling CAP - 187 ml
- Weight - 170 g
- Height - 183±1.3 mm
- Diameter - 51±1.1 mm
- Finish - 25 H NF H35-103
- Color - Olive Green

www.kmc.glass
sales@kmc.glass

KMC GLASS